Polymer Optics Limited

Our Focus is in Plastics

14mm Linear 15° LED Collimator Optic for Cree XP-E - Part No. 210

- **Designed for Cree XP-E LED's**
- **High light collection efficiency of >85%**
- **Linear design allows complete design flexibility of LED number, groupings and spacings**
- **Can be used with white, single colour, RGB, RGBA or any other combination of LEDs populated in linear strings**
- **Subtle diffuse surface finish applied to the Linear Optic provides improved tolerance to LED placement accuracy and improved colour mixing**
- **Precision manufactured in optical grade Polycarbonate for thermal stability and system durability**
- **Part of the Polymer Optics Limited LED Optics"® range**

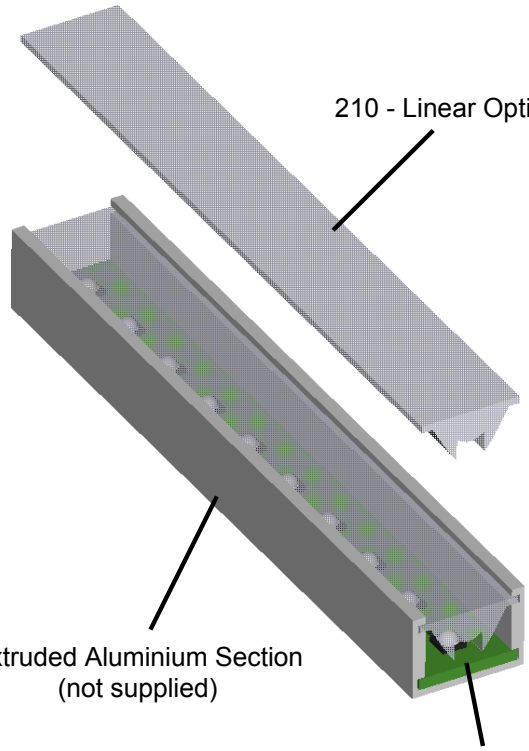

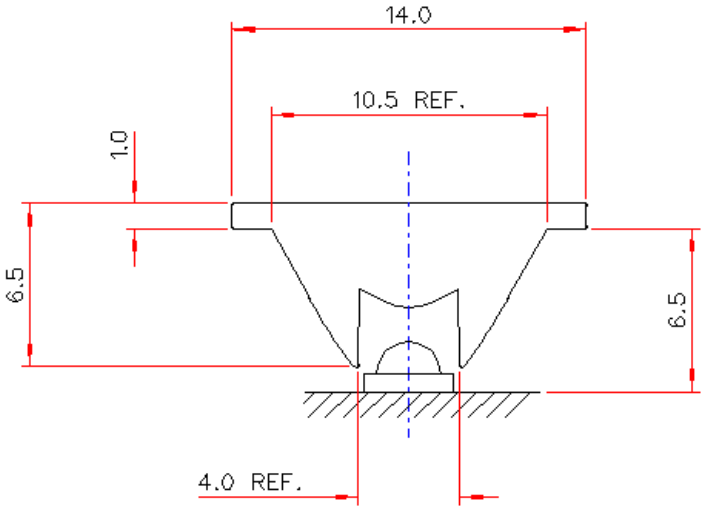

Typical dimensional tolerances
to +/-0.2mm

Due to continuous product improvement, POL reserve the right to change specifications without notice.

© Copyright Polymer Optics Limited 2008

Polymer Optics Limited

Our Focus is in Plastics

14mm Linear 15° LED Collimator Optic for Cree XP-E - Part No. 210

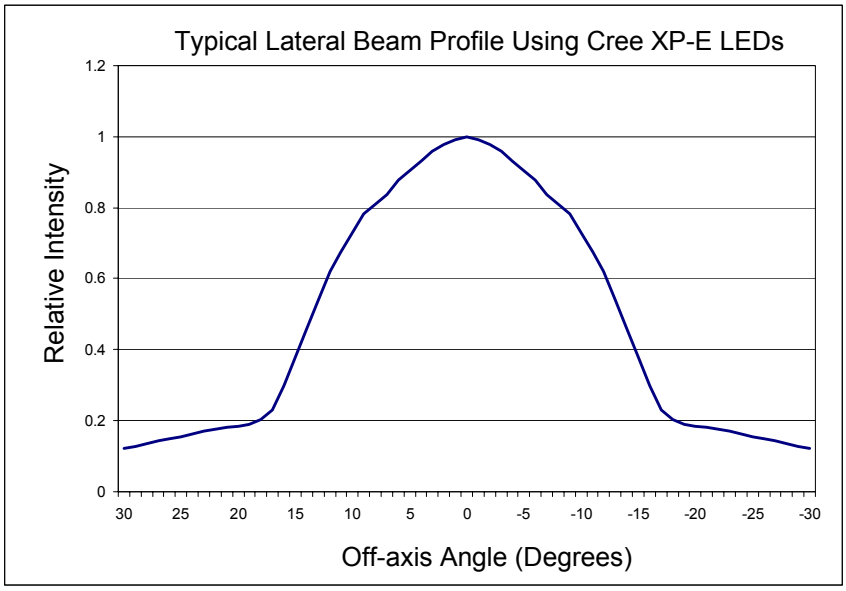

Beam profile in the longitudinal axis is near Lambertian

Typical illuminace values using 100 lumen white Cree XP-E Emitter = 1cd/lumen			
Range	0.5m	1m	2m
Illuminance	400 lux	100 lux	25 lux

Performance values given are typical values and will vary dependant on LED spacing, binning, colour and drive profile

© Copyright Polymer Optics Limited 2008

Polymer
Optics
Limited

Our Focus is in Plastics

14mm Linear 15° LED Collimator Optic for Cree XP-E - Part No. 210

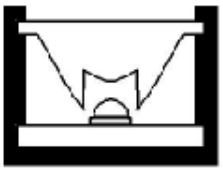

Possible aluminium extruded housing/heat-sink designs that can be used with the POL Linear Optic (not provided by POL, but to be defined by luminaire product designer)

- **Supplied in standard lengths of 1200mm**
- **Supplied with a front surface low-tack tape protection layer, to be removed before installation, which improves handling during shipment and product assembly**
- **Can be easily cut to required length using a hand-saw, table-saw, band-saw (or similar) fitted with a fine tooth blade (appropriate safety precautions must to be taken for the equipment used)**
- **Alternatively, lay the section flat face down on a stable surface and score across the peaks of the optical form at the required place. Then, bent at the score line towards the flat face and the Linear Optic will snap cleanly at the required point (appropriate safety precautions must to be taken for the equipment used)**
- **Compact Linear LED Collimator Optic design allows easy assembly to an extruded housing/heat-sink to enable small profile linear luminaires to be created for linear feature illumination and wall-washing applications**
- **Ideal for applications such as:**

  Wall washing
  Architectural Feature illumination
  Fluorescent strip light replacements
  Under-cupboard lighting
  Walkway illumination
  Large backlight coupling

- **POL's RoHS statement for this and all other POL products can be found at:- http://www.polymer-optics.co.uk/POL%20RoHS%20Statement.pdf**

© Copyright Polymer Optics Limited 2008

Polymer Optics Limited

Our Focus is in Plastics

14mm Linear 15° LED Collimator Optic for Cree XP-E - Part No. 210

Application Notes:

It should be noted that the thermal coefficient of expansion of polycarbonate (3.75 x 10^{-5}/^{O}C) is higher than the typical thermal coefficient of expansion for an aluminium alloy extruded housing/heatsink (23.2 x 10^{-6}/^{O}C). Therefore, should be taken into consideration in any extended, linear fitting design.

As a guide, a 1200mm long section of the polycarbonate extrusion will expand by 0.045mm/^{O}C raise in temperature, where an aluminium extruded housing of the same length will expand by 0.0278mm/^{O}C. Therefore the difference in linear expansion will be 0.0172mm/^{O}C.

So, if the 1200mm fitting experiences a temperature rise of 40°C, the polycarbonate Linear Optic will expand by around 0.7mm more then its aluminium housing. It is therefore recommended that some expansion clearance is allowed on the overall length of the Linear Optic in its housing.

Expansion gaps left at the ends of the Linear Optic, or gaps between lengths assembled end to end, can be filled with a silicone based elastomer material or similar flexible sealant/adhesive to allow for the expected expansion movement.

Product Packaging Quantities:

Part No. 210-10Pkt

10off 1200mm standard lengths of Part No. 210 - 14mm Linear 15° LED Collimator Optic

Heat sealed in heavy gauge polyethylene flat tube bag

Approximate total weight 675grms

Part No. 210-100Pkt

100off 1200mm standard lengths of Part No. 210 - 14mm Linear 15° LED Collimator Optic

Layer packed in heavy gauge cardboard box with approximate overall size of 1300mm x 175mm x 105mm

Approximate total weight 6.6kg

© Copyright Polymer Optics Limited 2008